Power Modules (Power Supplies with Ultra-low Standby Power Consumption)

■Features

1.Easy to design compact AC/DC due to small number of external components
2.Enables significant reduction in power consumption of no-load and light load
3.Corresponding world wide input and PFC output voltage (Vin:DC100V～420V)
4.Unique Tamura design insures significant reduction in 'buzz' under light-load conditions for lower noise level
5.Reinforced insulation

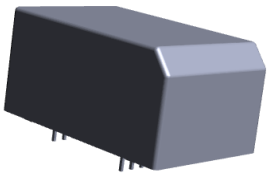

■Applications

・Industrial equipment
・Information processing equipment
・AV equipment
・Home electric appliances
・Other standby power supplies and compact power supplies

■Certified safety standards

UL62368-1, CSA C22.2 No.62368-1 (E132244)
UL60950-1, CSA C22.2 No.60950-1 (E132244)
IEC62368-1(CB), IEC60065(CB)

Certified input voltage range
…DC100-420V

■Applicable safety standards

UL/CSA/IEC/EN62368-1
UL/CSA/IEC/EN60950-1
UL/CSA/IEC/EN60065
IEC/EN60335-1

Applicable input voltage range
…DC100-420V

■Application circuit

Method to select external parts for input rectification and smoothing as well as output smoothing is supported by the application note

■Input-output condition

Item	Specification	Conditions・Note
Input voltage range	DC100V～420V (DC50V～420V)	Average voltage (Refer to the Input voltage derating curve)
Maximum input voltage	420V or less	Including peak value
Input ripple voltage lower limit	75V or more	Ripple voltage of the AC input rectified
Rated input voltage	DC140V, DC340V	
Rated output voltage	24V	
Rated load current	1.7A	
Maximum peak load current	2.5A	5s or less, Duty 30%. Average current 1.7A or less.

■Electrical specification Ta=25℃

Item	Specification	Conditions・Note
Efficiency	85% or more (90% TYP)	Rated input voltage Rated output current
Output voltage tolerance	±5%	
Line regulation	100mV or less	Input voltage DC100V～420V
Load regulation	250mV or less	Output current 0～1.7A
No-load power	50mW or less (25mW TYP)	Rated input voltage
Ripple	240mVp-p or less	Rated input voltage Rated output current
Ripple noise	300mVp-p or less	

Measurement circuit

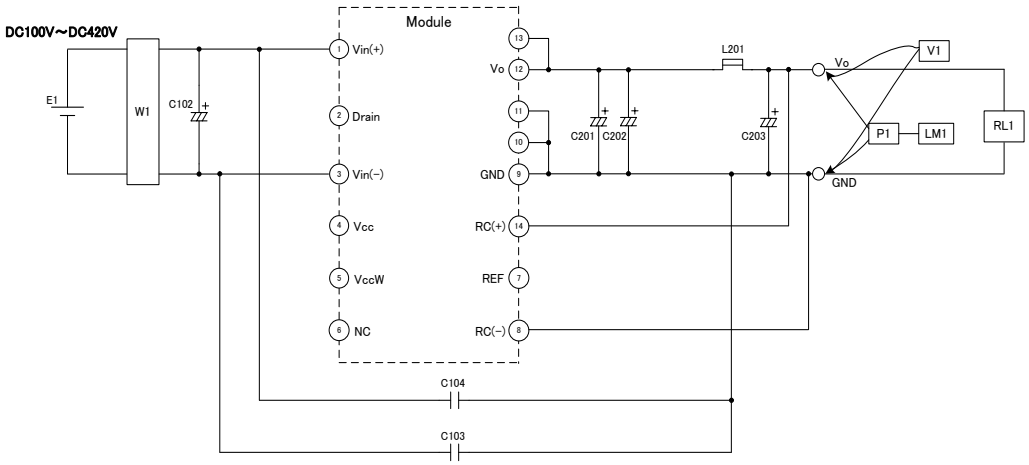

E1 : DC power supply
W1 : Power meter WT210 (YOKOGAWA)
RL1: Electronic load
V1 : Voltmeter Class 0.5
P1 : Differential probe DP-100(KG)
LM1: Ripple noize meter RM-103(KG)

C102 : 450BXW100M (RUBYCON)
C103 : CD45-B2GA331K (TDK)
C104 : CD45-B2GA331K (TDK)
C201 : 35ZLG680M (RUBYCON)
C202 : 35ZLG220M (RUBYCON)
L201 : PC8Z-2R2N (KORIN)

■Protection

Item	Specification	Conditions・Note
Overcurrent protection	2.5A or more	Hiccup mode
Overvoltage protection	27.6～33.6V	Latch off
Overheat protection		Latch off

■Insulation

Item	Specification	Conditions・Note
Dielectric withstand voltage (Between Pri－Sec)	AC3.75kV 1min	Cutoff 2mA
Insulation resistance (Between Pri－Sec)	100MΩ or more	DC500V

■Environmental conditions

Item	Specification	Conditions・Note
Operating temperature	-20℃～80℃	Refer to the Ambient temperature derating curve
Operating humidity	20～95%RH (No condensation)	
Storage temperature	-25℃～85℃	
Storage humidity	5～95%RH (No condensation)	

■Ambient temperature derating curve

Reduce the load current according to the following temperature derating table.

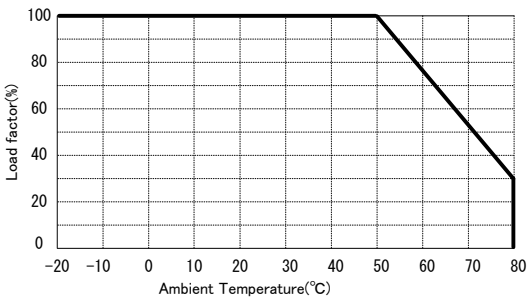

■Input voltage derating curve

Reduce the load current according to the following input voltage derating table.

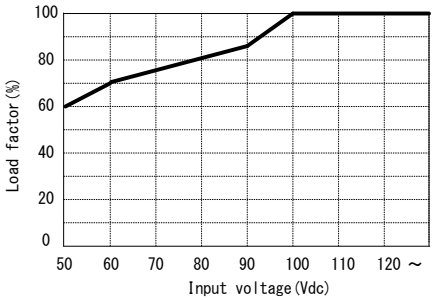

■Typical characteristics Ta=25℃

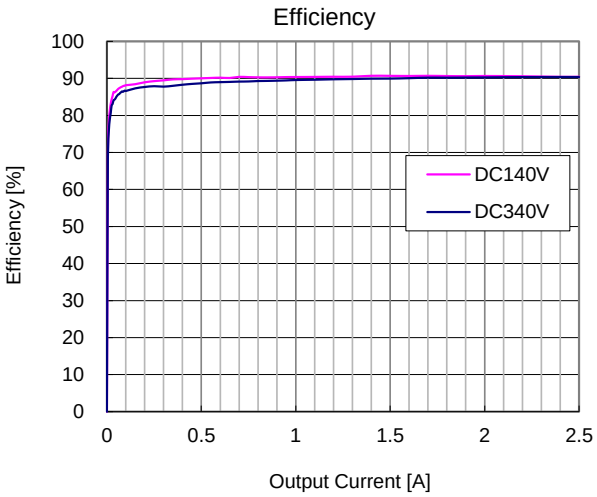

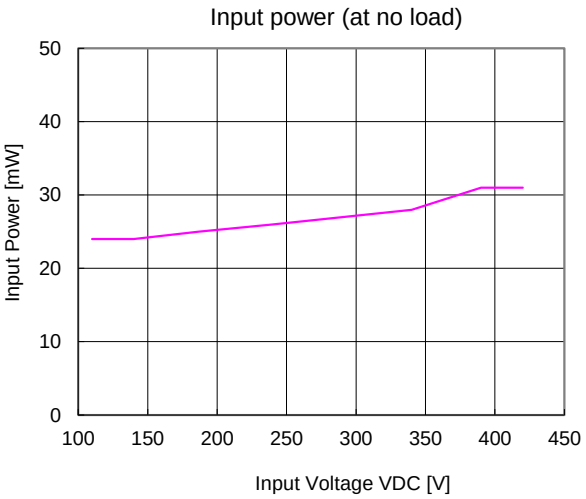

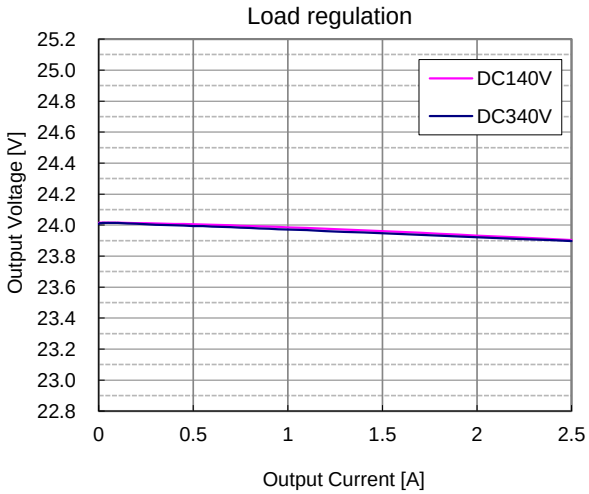

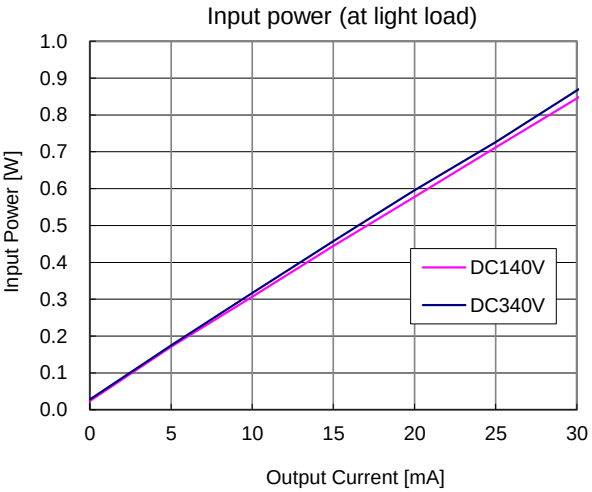

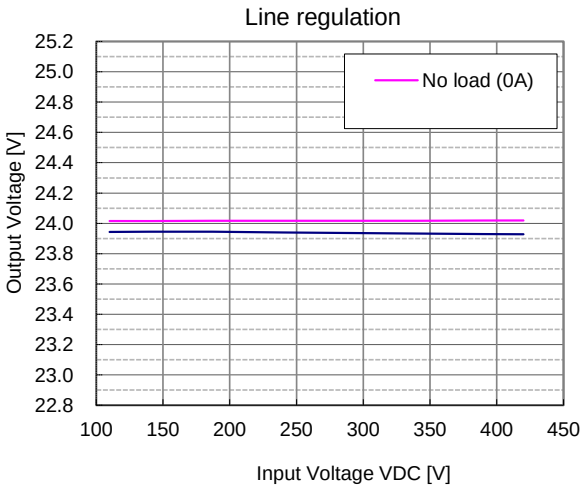

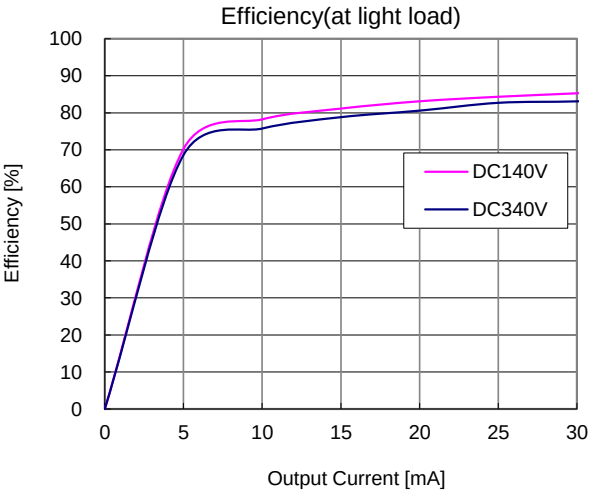

■Outline dimensional drawing

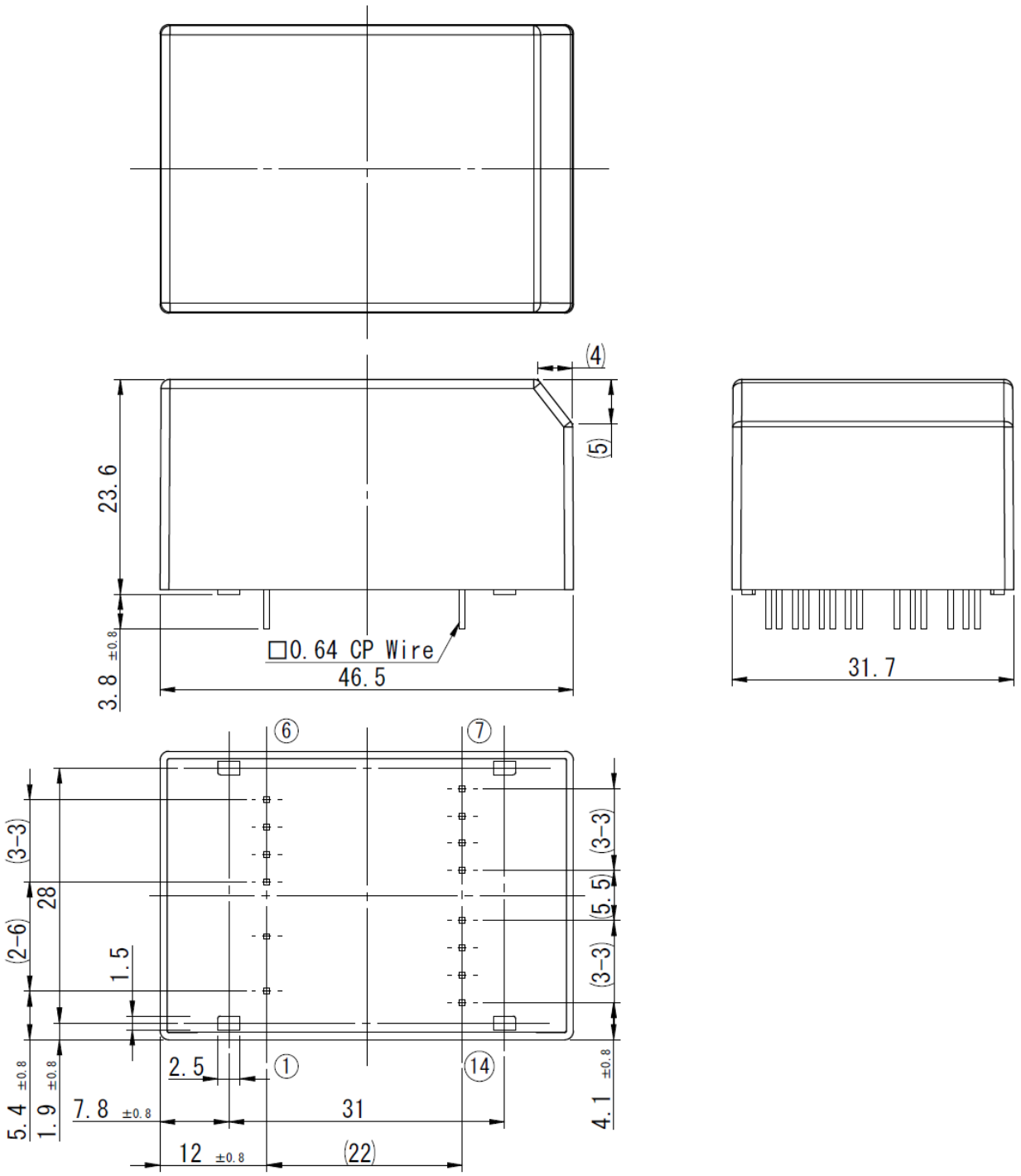

Note :1.The dimensional tolerance without directions is ± 0.5mm.

Unit:mm

■Recommended hole diameter and land size

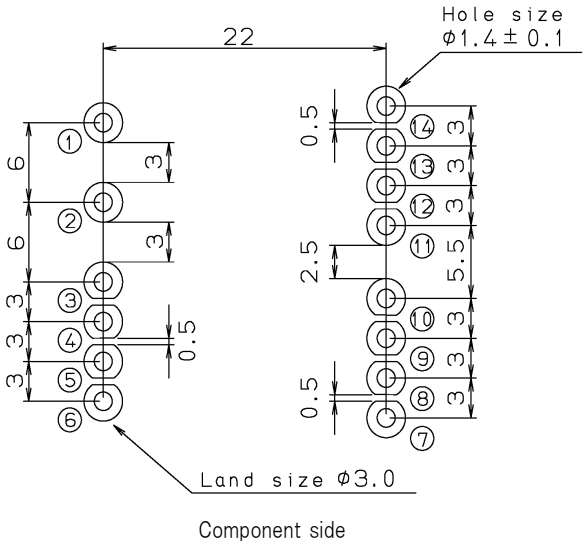

※ The round pulling out figure is a pin numbering.

Unit:mm

■Terminal function and connection

Primaries

Pin No.	Name	Explanation of terminals
1	Vin(+)	DC voltage input terminal (+)
2	Drain	Terminal for noise adjustment
3	Vin(−)	DC voltage input terminal (−)
4	Vcc	Terminal for start-up time adjustment
5	VccW	Auxiliary winding terminal ※Don't connect with other circuits.
6	N.C.	Unused terminal ※Don't connect with other circuits.

Secondaries

Pin No.	Name	Explanation of terminals
7	REF	Output voltage adjustment terminal
8	RC(−)	Output voltage detection terminal (−)
9	GND	Output terminal (−)
10	GND	Output terminal (−)
11	GND	Output terminal (−)
12	Vo	Output1 terminal (+)
13	Vo	Output1 terminal (+)
14	RC(+)	Output voltage detection terminal (+)

■Application circuit example

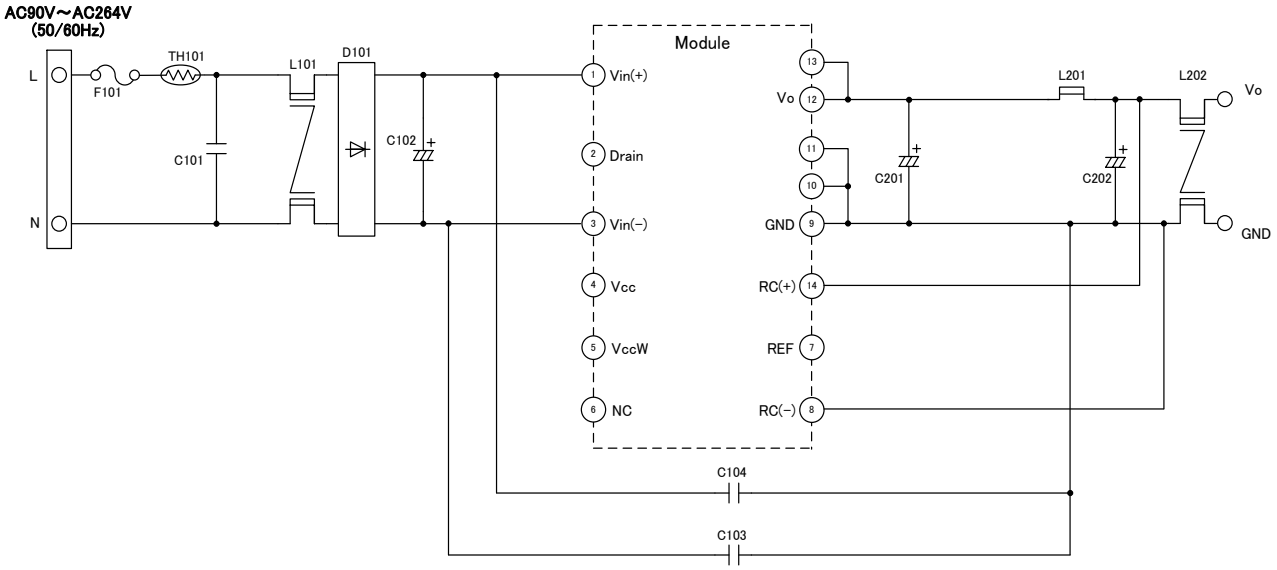

Symbol	Description	Part No.	Manufacturer
D101	Diode	D2SB60A	SHINDENGEN
L101	Inductor	HL-24R-E100THA	KORIN
L201	Inductor	PC8Z-2R2N	KORIN
L202	Inductor	0-5127-15-TM	KORIN
C101	Capacitor	LE104-MX	OKAYA
C102	Capacitor	400BXW100M	RUBYCON
C103	Capacitor	CD45-B2GA331K	TDK
C104	Capacitor	CD45-B2GA331K	TDK
C201	Capacitor	35ZLG680M	RUBYCON
C202	Capacitor	35ZLG220M	RUBYCON
F101	Fuse	FIH 250V 2.0A	NIPPON-SEISEN
TH101	Thermistor	SCK102R55AM	THINKING

※Mount the fuse on the input Live side to ensure safety without fail.
Recommended parts:FIH 250V 2.0A～3.15A / NIPPON-SEISEN

※Depend on the applying safety standard, please add the discharge resistance in paralell with C101.

■Usage cautions

● Always mount fuse on the Live side of input for ensuring safety because the fuse is not built-in the product.
Please select the fuse considering conditions such as steady current, inrush current, and ambient temperature at your own respons
※Recommended parts: FIH 250V 2.0A～3.15A / NIPPON-SEISEN
When using a fuse having large rated current or high capacity input electrolytic condenser, by combining another converter and input line and input electrolytic condenser, fuse may not blow off in the case of abnormality.
Do not combine high voltage line and fuse.

■Important notice

● The content of this document is subject to change without prior notice for the purpose of improvements, etc.
Ensure that you are in possession of the most up-to-date information when using this product.

● The operation examples and circuit examples shown in this document are for reference purposes only, and TAMURA Corporation disclaims all responsibility for any violations of industrial property rights, intellectual property rights and any other rights owned by TAMURA Corporation or third parties that these may entail.

● The circuit examples and part constants listed in this document are provided as reference for the verification of characteristics. You are to perform design, verification, and judgment at your own responsibility, taking into account the various conditions.

● TAMURA Corporation constantly strives to improve quality and reliability, but malfunction or failures are bound to occur with some probability in power products. To ensure that failures do not cause accidents resulting in injury or death, fire accidents, social damage, and so on, you are to thoroughly verify the safety of their designs in devices and/or systems, at your own responsibility.

● This product is intended for use in consumer electronics (electric home appliances, business equipment, Information equipment, communication terminal equipment, measuring devices, and so on.) If considering use of this product in equipment or devices that require high reliability (medical devices, transportation equipment, traffic signal control equipment, fire and crime prevention equipment, aeronautics and space devices, nuclear power control, fuel control, in-vehicle equipment, safety devices, and so on), please consult a TAMURA sales representative in advance. Do not use this product for such applications without written permission from TAMURA Corporation.

● This product is intended for use in environments where consumer electronics are commonly used.
It is not designed for use in special environments such as listed below, and if such use is considered, you are to perform thorough safety and reliability checks at your own responsibility.
- Use in liquids such as water, oil, chemical solutions, or organic solvents, and use in locations where the product will be exposed to such liquids.
- Use that involves exposure to direct sunlight, outdoor exposure, or dusty conditions.
- Use in locations where corrosive gases such as salt air, C12, H2S, NH3, SO2, or NO2, are present.
- Use in environments with strong static electricity or electromagnetic radiation.
- Use that involves placing inflammable material next to the product.
- Use of this product either sealed with a resin filling or coated with resin.
- Use of water or a water soluble detergent for flux cleaning.
- Use in locations where condensation is liable to occur.

● This product is not designed to resist radiation.

● This product is not designed to be connected in parallel.
Do not operate this product in a parallel, or N+1 redundant configuration.

- Do not use or otherwise make available the TAMURA products or the technology described in this document for any military purposes, including without limitation, for the design, development, use, stockpiling or manufacturing of mass destruction weapons (e.g. nuclear, chemical, or biological weapons or missile technology products).
  When exporting and re-exporting the products or technology described in this document, you should comply with the applicable export control laws and regulations and follow the procedures required by such laws and regulations including, without limitation, Japan -Foreign Exchange and Foreign Trade Control Law and U.S.- Export Administration Regulations.
  The TAMURA products and related technology should not be used for or incorporated into any products or systems whose manufacture, use, or sale is prohibited under any applicable domestic or foreign laws or regulations.

- Please contact your TAMURA sales office for details as to environmental matters such as the RoHS compatibility of product.
  Please use TAMURA products in compliance with all applicable laws and regulations that regulate the inclusion or use of controlled substances, including without limitation, the EU RoHS Directive.
  TAMURA assumes no liability for damages or losses occurring as a result of your noncompliance with applicable laws and regulations.

- TAMURA assumes no liability for damages or losses incurred by you or third parties as a result of unauthorized use of TAMURA products.

- This document and any information herein may not be reproduced in whole or in part without prior written permission from TAMURA.